AS61 Series

Pressure Sensor Unamplified & Uncompensated

AS61 is a surface mounting pressure sensor based on ACT Sensor silicon based piezoresistive pressure sensor die. The sensor die is bonded on a substrate with a plastic cap and packaged in a 6-pin SOP. The small size and high reliability of on-chip integration make this sensor a simple and economical choice for high volume application in a variety of industries. With standard SOP6 package, AS61 is easy for users to install by SMT or through hole board assembly.

With good repeatability, linearity, stability and sensibility, AS61 is very facile for users to calibrate output & thermal drift and make temperature compensation by using exterior operational amplifier or integrated circuit.(For direct application if required, please check AS03 series)

The AS61 pressure sensor is intended for use with non-corrosive gas or air. It is highly prohibited to choke the side of pressure diaphragm during actual application. Please consult us if a pressure medium other then air is to be used.



Major features

- Range: -100～7kPaG…1000kPaG
- MEMS Technology, Solid-state reliability
- Low cost for high volume application
- Surface Mounting
- For non-corrosive gas or air
- Working temp.: -30℃～+125 (-22℉～+257℉)
- Gage pressure type
- Easy to use and embed in OEM equipment

Applications

For Medical and healthy equipment field, such as Blood pressure test and monitor.

Patient Monitoring, Infusion and Syringe Pumps, Anesthesia Machines, Respirators and Ventilators, NPWT.

DVT, COPD Treatment, catheter, Kidney dialysis, Cupping& Cosmetology, Massage device etc.

For Home appliance field, such as Refri- gerator, Printer, Humidifier, Washer/Dryer, Coffee

Machine, Cleaner, Robotic, Emergency Lamp, Sport Equipment etc.

For Other fields, such as air pump, emergency lamp, dust collector, HVAC and pneumatic device, automotive application etc.

Electronic performance

Power Supply	:	≤15Vdc or ≤3.0 mAdc
Input Impedance	:	4kΩ～6kΩ
Output Impedance	:	4kΩ～6kΩ
Insulation Resistor	:	100MΩ,100VDC
Over Pressure	:	1.5X Rated Pressure
Burst Pressure	:	2X Rated Pressure

Construction

Sensing Die	:	Silicon
Die Mounting Glue	:	Silicone glue
Leading wire	:	Gold wire
Package Housing	:	PPS (Phenylene sulfide)
Pin	:	silver plated copper
Net Weight	:	Approx.1g

Environment Condition

Orientation	:	Deviate 90° from any direction, zero change ≤ 0.05%FS
Shock	:	No change at 10gRMS,(20～2000)Hz condition
Impact	:	100g,11ms

Medium Compatibility

Pressure side	:	Air or gas compatible with silicone, silicone glue, epoxy glue or PPS
Reference side	:	Dry air and non-corrosive gas compatible with PPS, silicon and silicone glue or epoxy, gold, aluminum and silver.

Test Condition

Medium	:	Gas(Clean air and Non-corrosive gas)
Medium Temp	:	(25±1)℃/(77±1.8)℉
Environment Temp.	:	(25±1)℃/(77±1.8)℉
Shock	:	0.1g (1m/s2) Max
Humidity	:	(50%±10%) RH
Power Supply	:	(5±0.005) VDC

Specifications

Specifications		Min.	Typ.	Max	Unit
Pressure Range①		-100,7,10,20,40,100,200,1000 -15,1,1.5,2.9,5.8,15,30,150 -750,50,53,75,150,300,750...			kPa Psi mmHg
Working Temperature		-30/-22		+125/257	℃/℉
Storage Temperature		-40/-40		+140/284	℃/℉
Bridge Resistance		4	5	6	kΩ
Offset/Zero Output		-20		+20	mV
FS Output	≤10kPa/1.45Psi 20kPa/2.9Psi 40kPa/5.8Psi ≥100kPa/≥15Psi	35 35 60 70	50 40 75 90	65 50 90 110	mV mV mV mV
Temp. Coefficient of Resistance⑤		1600	2100	2600	ppm/℃
TCO(Temp. Coefficient of Offset)⑤		-0.05② -0.05③	±0.02② ±0.02③	0.05② 0.05③	%FS/℃ %FS/℃
TCS(Temp. Coefficient of Span)⑤		-0.25② -0.3③	-0.21② ±0.02③	-0.17② 0.3③	%FS/℃ %FS/℃
Linearity④		-0.3		0.3	% FS
Hysteresis		-0.2		0.2	%FS
Repeatability		-0.2		0.2	%FS
Long-term Stability		-1.0		1.0	%FS
Response Time				0.1	mSec.

Note:

①The max negative pressure specified above is exactly 98.07kPa in actual application.

②Excited by constant voltage

③Excited by constant current

④Defined as best fit straight line

⑤Temperature coefficient is measured from 0℃ to 60℃.(32℉～140℉)

Unless otherwise specified, measurements were taken on base of above testing condition

PIN Connection & Definition

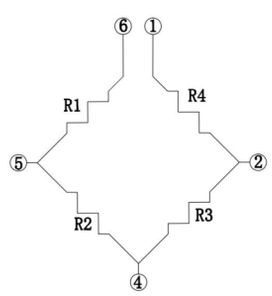

Pin	1	2	3	4	5	6
Definition B1	Vo-	GND	N/C	Vo+	Vs+	Vo-
Definition B2	GND	Vo-	N/C	Vs+	Vo+	GND

Symbol	Vs+	GND	Vo+	Vo-
Definition	Power +	Power -	Output +	Output -

Dimension (Unit:mm)

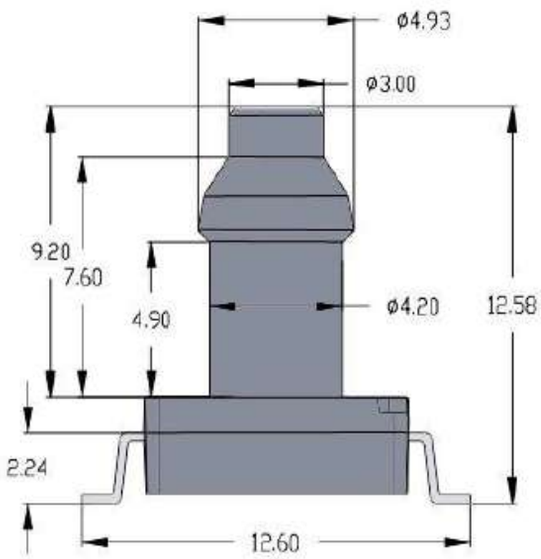

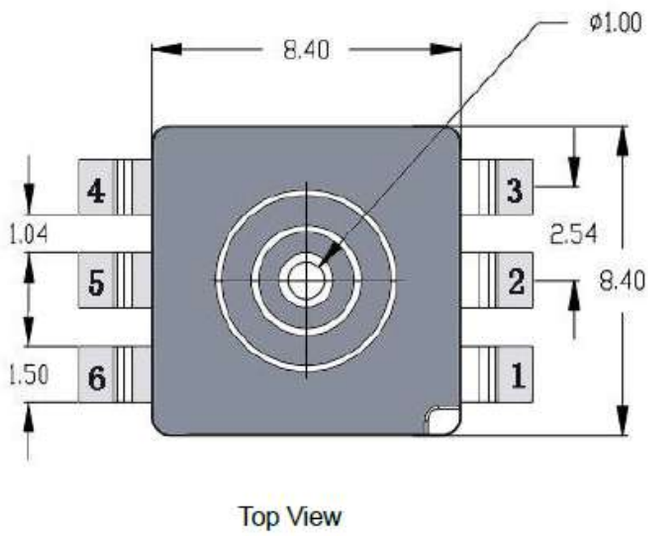

Top View

Order Guide

AS61	Piezo-resistive Pressure Sensor		
	Code	Range	100kPa=0.1mKp=750mmHg=10MH2O ~ 1Bar ~14.5 Psi
	010S	0~10kPa	Available for Negative pressure(-10~10kPa)
	020S	0~20kPa	Available for Negative pressure(-20~20kPa)
	040S	0~40kPa	Available for Negative pressure(-40~40kPa)
	101S	0~100kPa	Available for Negative pressure(-100~100kPa)
	201S	0~200kPa	Available for Negative pressure(-100~200kPa)
	701S	0~700kPa	Available for Negative pressure(-100~700kPa)
	102S	0~1000kPa	Available for Negative pressure(-100~1000kPa)
AS61	101S		the whole spec.

Application Circuit(example)

This pressure sensor(mV output) is usually amplified for final application by means of constant voltage or constant current.

The right circuit is a typical circuit application in where the pressure sensor is applied by constant current excitation

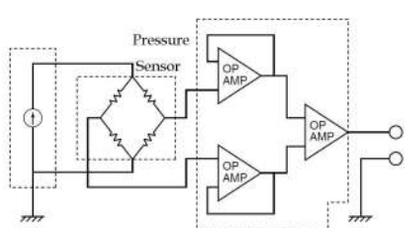

More Recommendation

Both sensor at right place are calibrated pressure sensor with amplified analog output signal or digital output(I2C interface).

They are temperature compensation with customized pressure range and input/output parameter, which

can be applied in your project directly. Please contact us for more information.



AS21



AS60



AS03

Reference Diagram (Base on above test condition)

Linearity (AS61040SB1, 0-40kPa by 1mA)



Temperature Coefficient excited by Constant Current(AS61040SB1, 0-40kPa by 1mA in 0-60°C)

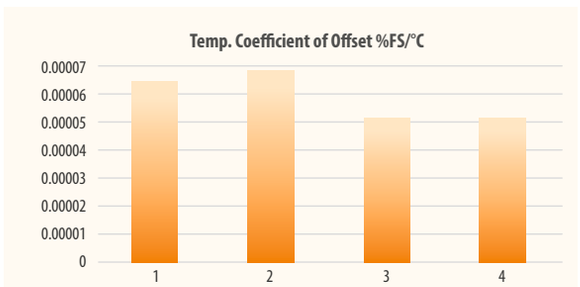

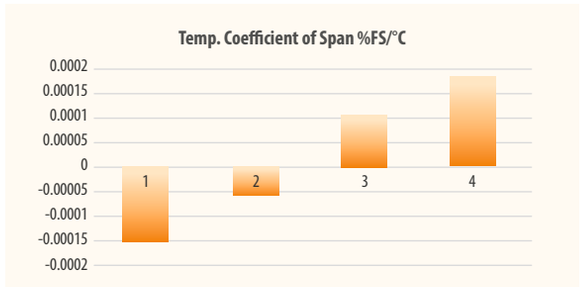

Temperature Coefficient excited by Constant Voltage (AS61040SB1, 0-40kPa by 5Vdc in 0-60°C)

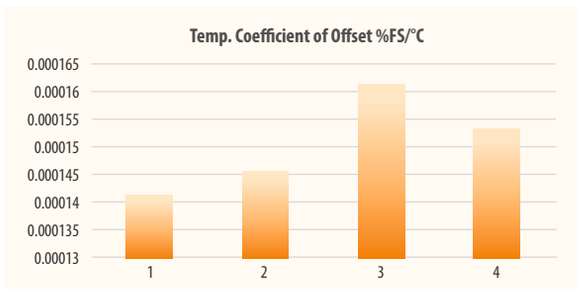

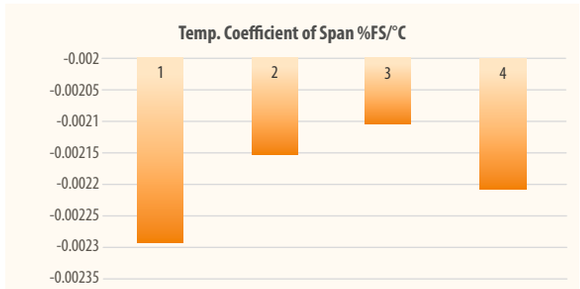

General Notes

Mounting

Adopting land on the PC board for ensuring the sensor is securely fixed.

Soldering

Due to its small size, the thermal capacity of the pressure sensor is low. Therefore, take steps to minimize the effects of external heat. Damage and changes to characteristics may occur due to heat deformation. Use a non-corrosive resin type of flux. Since the pressure sensor is exposed to the atmosphere, do not allow flux to enter inside.

- **Manual soldering**

  Raise the temperature of the soldering tip between 260 and 300°C/500 and 572°F (30 W) and solder within 5 seconds.

  The sensor output may vary if the load is applied on the terminal during soldering. Keep the soldering tip clean.

- **DIP soldering (DIP Terminal)**

  Keep the temperature of the DIP solder tank below 260°C/500 and solder within 5 seconds.

  To avoid heat deformation, do not perform DIP soldering when mounting on the circuit board which has a small thermal capacity

- **Reflow soldering (SMD Terminal)**

  The recommended reflow temperature profile conditions are given below.

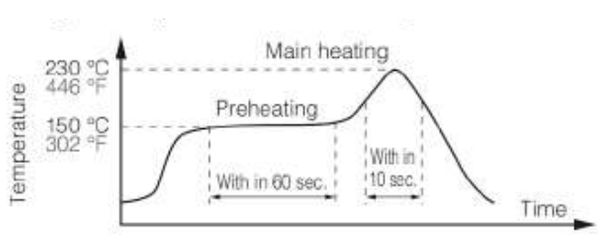

We recommend the screen solder printing method as the method of cream.

Please refer to the recommended PC board specification diagram for the PC board foot pattern.

Self alignment may not always work as expected, therefore, please carefully the position of the terminals and pattern.

The temperature of the profile is assumed to be a value measured with the printed wiring board of the terminal neighborhood.

Please evaluate solderability under the actual mounting conditions since welding and deformation of the pressure inlet port may occur due to heat stress depending on equipment's or conditions.

- **Rework soldering**

  Complete rework at a time. Use a flattened soldering tip when performing rework on the solder bridge. Do not add the flux. Keep the soldering tip below the temperature described in the specifications.
- Avoid drop and rough handling as excessive force may deform the terminal and damage soldering characteristics.
- Keep the circuit board warpage within 0.05 mm of the full width of the sensor.
- After soldering, do not apply stress on the soldered part when cutting or bending the circuit board.
- Prevent human hands or metal pieces from contacting with the sensor terminal. Such contact may cause anomalous outlets as the terminal is exposed to the atmosphere.
- After soldering, prevent chemical agents from adhering to the sensor when applying coating to avoid insulation deterioration of the circuit board.

Wire Connection

- Correctly wire as in the connection diagram. Reverse connection may damage the product and degrade the performance.
- Do not use idle terminals to prevent damages to the sensor.

Cleaning

- Since the pressure sensor chip is exposed to the atmosphere, do not allow cleaning fluid to enter inside.
- Avoid ultrasonic cleaning since this may cause breaks or disconnections in the wiring.

Environment

- Please avoid using or storing the pressure sensor chip in a place exposed to corrosive gases (such as the gases given off by organic solvents, sulfurous acid gas, hydrogen sulfides, etc.) which will adversely affect the performance of the pressure sensor chip.
- Since this pressure sensor chip does not have a water-proof construction, please do not use the sensor in a location where it may be sprayed with water, etc.
- Avoid using the pressure sensors chip in an environment where condensation may form. Furthermore, its output may fluctuate if any moisture adhering to it freezes.
- The pressure sensor chip is constructed in such a way that its output will fluctuate when it is exposed to light Especially when pressure is to be applied by means of a transparent tube, take steps to prevent the pressure sensor chip from being exposed to light.
- Avoid using the pressure sensor chip where it will be susceptible to ultrasonic or other high-frequency vibration.
- Please keep the sensors sealed using static shielding bags on storage. The PINs of sensor are plated by Ag. If the sensors expose to an atmosphere, the PINs will be black by oxidation.

Quality Check under actual loading conditions

To assure reliability, check the sensor under actual loading conditions. Avoid any situation that may adversely affect its performance.

Other handling precautions

- That using the wrong pressure range or mounting method may result in accidents.
- The only direct pressure medium you can use is air or gas. The use of other media, in particular, corrosive gases (organic solvent based gases, sulfurous acid based gases, and hydrogen sulfide based gases, etc.) and media that contains heavy moisture or foreign substances will cause malfunction and damage. Please do not use them.
- The pressure sensor chip is positioned inside the pressure inlet. Never poke wires or other foreign matter through the pressure inlet since they may damage the chip or block the inlet. Avoid use when the atmospheric pressure inlet is blocked.
- Use an operating pressure which is within the rated pressure range. Using a pressure beyond this range may cause damage.
- Since static charge can damage the pressure sensor chip, bear in mind the following handling precautions. When storing the pressure sensor chips, use a conductive material to short the pins or wrap the entire chip in aluminum foil. Plastic containers should not be used to store or transport the chips since they readily become charged. When using the pressure sensor chips, all the charged articles on the bench surface and the work personnel should be grounded so that any ambient static will be safely discharged.
- Based on the pressure involved, give due consideration to the securing of the pressure sensor DIP type and to the securing and selection of the inlet tube.

Safety Precautions

- Do not use these sensors under any circumstances in which the range of their ratings, environment conditions or other specifications are exceeded. Using the sensors in any way which causes their specifications to be exceeded may generate abnormally high levels of heat, emit smoke, etc., resulting in damage to the circuitry and possibly causing an accident.
- Before connecting a connector, check the pin layout by referring to the connector wiring diagram, specifications diagram, etc., and make sure that the connector is connected properly. Take note that mistakes made in connection may cause unforeseen problems in operation, generate abnormally high levels of heat, emit smoke, etc., resulting in damage to the circuitry.
- Do not use any pressure sensor which has been disassembled or remodeled.
- Protection circuit recommended.

  The possible failure mode is either open or short of the output transistor. An excess heat is the cause for short mode failure. For any important and serious application in terms of safety, add protection circuit or any other protection method.
- Various safety equipment
- Safety equipment Traffic light
- Security crime prevention equipment
- Equipment concerning control and safety of trains, cars, etc.
- Applications such as temperature control using sensor output etc.
- If it is expected that malfunction of each sensor may cause injury to persons or serious expansion damage, be sure to implement safety measures such as double safety circuit.

Due to continuous development of our products technical information's are subject to change.
Please ensure the compatibility between the measured medium and the contacting part of the product when placing an order.

ACT Sensors reserves the right to make any change in this datasheet without notice. The information provided is believed to be accurate and reliable as of this product sheet.

Contact factory for customization

Your Engineering Partner...
ACT SENSORS PVT. LTD.
GNP Galaxy, Unit No. 28, Ground Floor, Zone-4, Phase -2, Kansai, Ambernath Industrial Area, Kalyan- Badlapur Road, Ambernath(W) – 421 501
www.actsensor.in www.actsensor.net